FGT-PT1000 **SIEMENS**

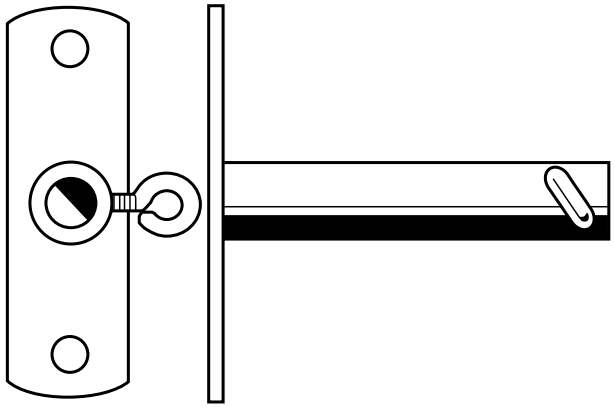

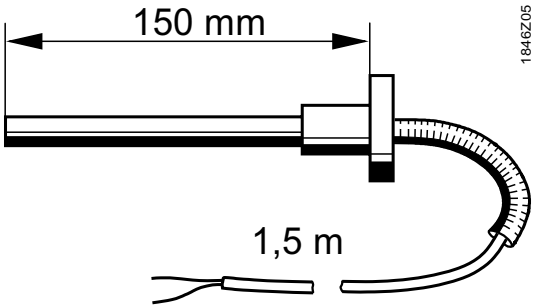

M1846_01